## 8-pin mini-DIN to DB-9

This cable connects VSX 7000e or VSX 8000 serial port inputs to a non-Polycom camera using a VISCA 8-pin DIN connector, or to a Polycom PowerCam break-out cable with a PowerCam camera. It is 8-pin mini-DIN to DB-9. RTS/CTS and IR are not supported on this cable.

| Length | Part Number | RoHS Compliant |
|---|---|---|
| 50 ft (15 m) | 2457-10029-200 | Yes |

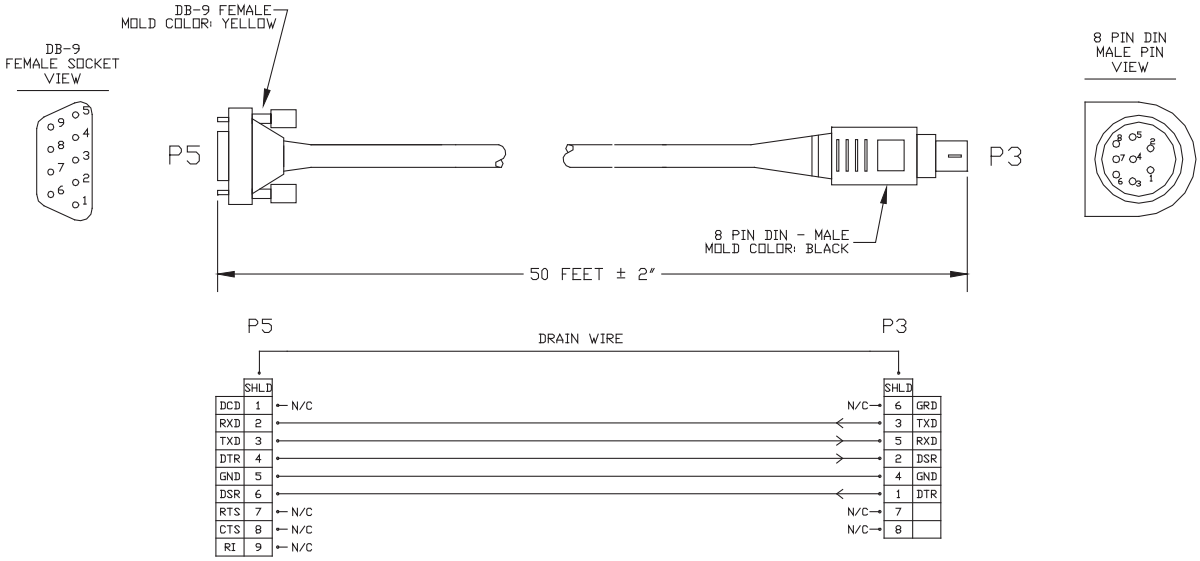


Drawings and part numbers are provided for reference only. Polycom claims no responsibility or liability for the quality, performance, or reliability of cables based on these reference drawings, other than cables provided by Polycom. Contact your Polycom distributor or Polycom Custom/Vertical Products to order cables that meet the appropriate manufacturing tolerances, quality, and performance parameters for your application.